IDENTITY DELETION AND REGROUPING IN COORDINATE STRUCTURES

James H-Y. Tai
Southern Illinois University at Carbondale

1. Introduction. The purpose of this paper is to discuss some essential properties of identity deletion and regrouping in coordinate structures conjoined with and, and to propose a new analysis of coordination reduction which can be shown to be more general and of greater explanatory value than such other well-known alternative analyses as those presented by Schane (1966), Ross (1967b), Postal (1968), Stockwell et al. (1969), and Dougherty (1970).

The proposed treatment analyzes coordination reduction into two ordered processes, which are to be referred to as Identity Deletion and Regrouping. It will be shown that in conjunction with Respectively Insertion and Each-Other Pronominalization, these two processes can explicitly relate the following four types of coordination reduction.

Type A: (1)a John sang and John danced.
b John sang and danced.
(2)a John came and Bill came.
b John and Bill came.
(3)a John hit the dog and John hit the cat.
b John hit the dog and hit the cat.
c John hit the dog and the cat.
(4)a John hit the dog and John kicked the dog.
b John hit the dog and kicked the dog.
c John hit and kicked the dog.
Type B: (5)a John loves the dog and Bill loves the cat.
b John loves the dog and Bill the cat.
(6)a John hit the dog and Bill kicked the dog.
b John hit and Bill kicked the dog.
Type C: (5)c John and Bill loves the dog and the cat respectively.
(6)c John and Bill hit and kicked the dog respectively.
Type D: (7)a John hit Bill and Bill hit John.
b John and Bill hit each other.

In type A, the reduction results in conjoined constituents of lower order. In type B, the reduction involves merely the deletion of identical constituents. In type B, the result of reduction is the respectively construction. In type D, the result is the each-other construction.

2. Identity Deletion. Gapping is a rule proposed by

Ross (1967a) which deletes indefinite number of main verbs in coordinate structures. Ross proposes a directionality constraint on this rule in order to account for the fact that while Gapping operates forward in English, it operates backward in Japanese.

(8)a I ate fish and Bill ate rice.
b I ate fish and Bill rice.
c*I fish and Bill ate rice.
(9)a watakushi wa sakana o tabeta to, Biru wa gohan o tabeta.
(I) (fish) (ate) (and) (rice)
b watakushi wa sakana o, Biru wa gohan o tabeta.
c*watakushi wa sakana o tabeta, Biru wa gohan o.

The directionality constraint states:

(10) The order in which Gapping operates depends on the order of elements at the time that the rule applies; if the identical elements are left branches, Gapping operates forward; if they are on right branches, it operates backward. (Ross, 1967a p. 5).

Sanders (1969, 1970) observes that this directionality constraint holds not only for verbal reductions but also for all other reduced coordinations as well. He gives the following well-formed reductions in English for illustration.

(11) (a) (S PRED) (Ø PRED) John sang and ~~John~~ danced.
(b) (S ~~PRED~~) (S PRED) John ~~sang~~ and Bill sang.
(c) (S (VØ)) (S (VO)) I wrapped ~~the~~ ~~package~~ and you tied the package.
(d) (DET N) (~~DET~~ N) The king and ~~the~~ queen arrived.
(e) (ADJ ~~N~~) (ADJ N) The young ~~men~~ and old men left.

It is therefore necessary for any correct analysis of coordination reduction to incorporate the directionality constraint in (10).

In addition to the directionality constraint, there is a hierarchical constraint on identity deletion in coordinate structures. This constraint states:

(12) Higher identical constituents must be deleted before lower identical constituents.

This hierarchical constraint accounts for the fact that old in (13a) cannot be deleted without like sunshine being first deleted.

(13)a Old men like sunshine and old women like sunshine.
b Old men and old women like sunshine.
c Old men and women like sunshine.
d*Old men like sunshine and women like sunshine.

It also accounts for the impossibility of Gapping in coordinate sentences in which the subjects or the objects in each conjunct are identical, as shown in (14d) and (15d). Furthermore, it accounts for the fact that deletion of identical objects is questionable when the subjects or the verbs in each conjunct are identical, as shown in (15c) and (16d).

(14)a The boy hit the dog and the boy hit the cat.
b The boy hit the dog and hit the cat.
c The boy hit the dog and the cat.
d*The boy hit the dog and the boy the cat.
(15)a The boy hit the dog and the girl hit the dog.
b The boy and the girl hit the dog.
c?The boy hit and the girl hit the dog.
d*The boy hit the dog and the girl the dog.
(16)a The boy hit the dog and the boy kicked the dog.
b The boy hit the dog and kicked the dog.
c The boy hit and kicked the dog.
d?The boy hit and the boy kicked the dog.

To generate the grammatical reduced sentences in (14)-(16), and to block the ungrammatical ones, we can assume that Identity Deletion and Regrouping can reapply to their own output successively from coordinate sentences to coordinate structures of lower order. If we adopt this assumption, then in each application of Identity Deletion, only the highest identical constituent can be deleted. The process of Identity Deletion can thus be stated in the following way.

(17) Delete all but one of the corresponding highest identical constituents in each conjunct. If they are left branches, the deletion operates forward; if they are right branches, it operates backward.

(17) can be formulated as a mirror image rule according to the convention proposed by Langacker (1969).

(18) Identity Deletion (optional, mirror-image)[1]

$$[[X_1-[A-X_2]_C-X_3]_B[X_4-[A-X_5]_C-X_6]_B^n]_B \longrightarrow 12345\emptyset78$$

1 2 3 4 5 6 7 8

condition: (1) A is the highest identical constituent in B.
(2) $X_2 \neq 0$ and $X_5 \neq 0$

3. Regrouping. Through Identity Deletion, we get structures like (19) and (20), in which the reduced conjunct is no longer branching, as well as (21) and (22), in which the reduced conjunct is still branching.

(19)

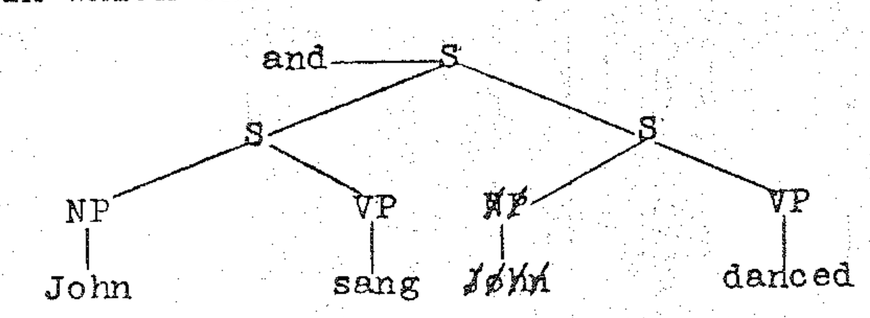

(20)

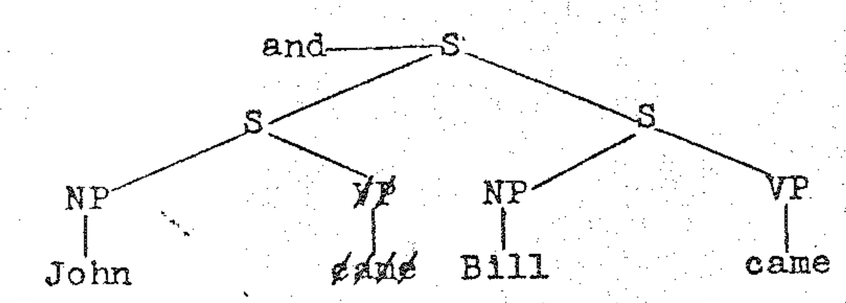

(21)

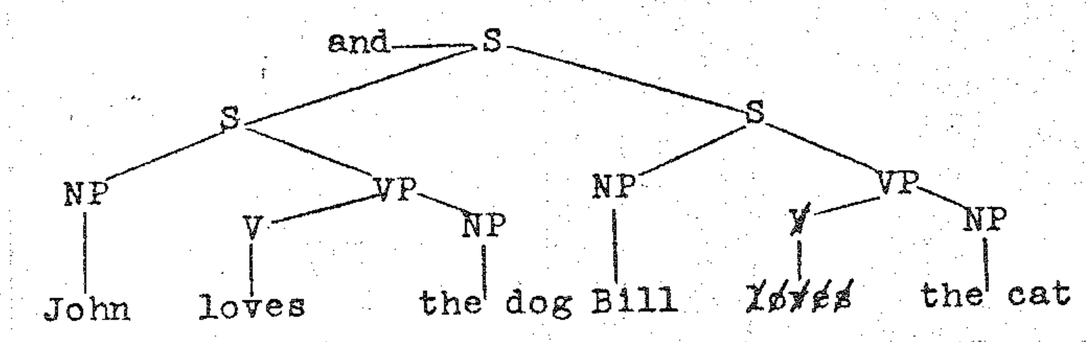

(22)

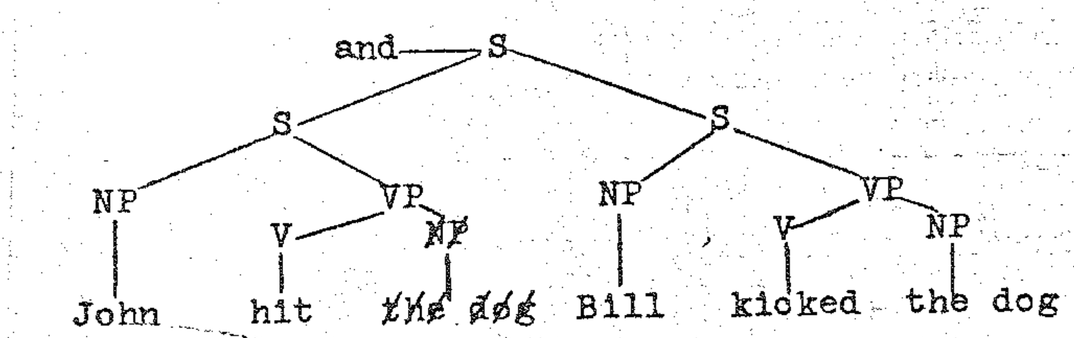

If we Chomsky-adjoin the remaining constituents of the reduced conjuncts onto the corresponding constituents of the unreduced conjuncts, and then delete all empty nodes, we convert (19), (20), (21), and (22) into (23), (24), (25), and (26) respectively.

(23)

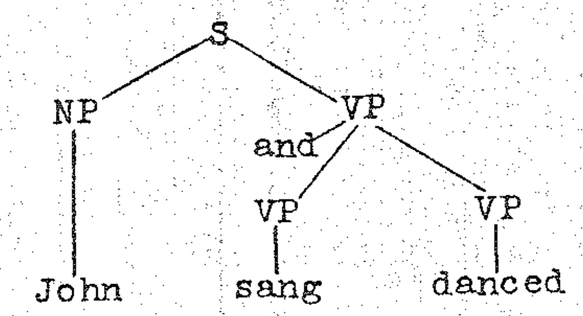

(24)

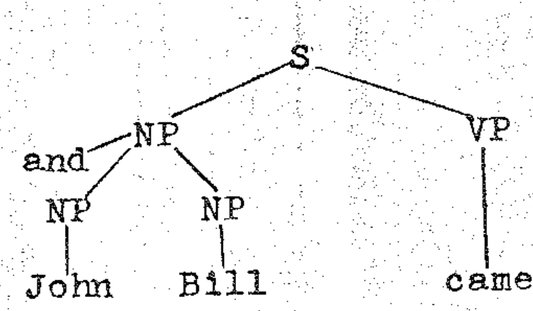

(25)

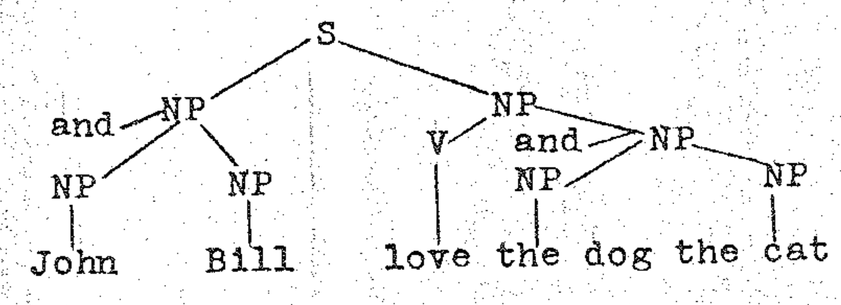

(26)

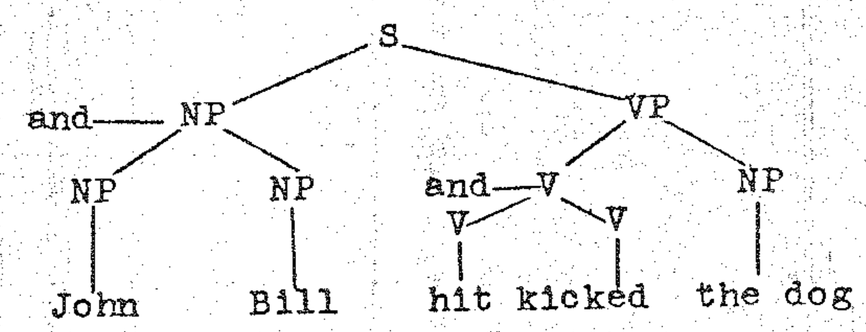

This process of Chomsky-adjoining a node to a corresponding node in coordinate structures will be referred to as the process of Regrouping.

It is to be assumed in this paper that (23) and (24), and not (19) and (20), can provide (1b) and (2b) with correct derived structures.[2] Thus, the process of Regouping must be obligatory for (19) and (20), in which the reduced conjunct is no longer branching. Yet, (21) and (22) are correct derived structures for (5b) and (6b) respectively.[3] Thus, the process of Regrouping is optional for (21) and (22), where the reduced conjunct is still branching. If Regrouping does apply to (21) and (22), (21) yields (25), and (22), (26). If in converting structures like (21) and (20) into (25) and (26), we attach the morpheme "respectively" to the coordinate node, we get (5c) from (5b), and (6c) from (6b) In other words, we get sentences of the C type by applying Regrouping optionally to sentences of the B type.

Intuitively speaking, in the case of (19) and (20),

the coordinate structure is destroyed by the effect of the application of Identity Deletion, it is therefore necessary to reconstruct a coordinate structure of lower order. However, in the case of (21) and (22), the coordinate structure is not destroyed, and they are well-formed structures. This can be obviously seen from the fact that the convention of Tree-Pruning will delete the reduced S node in (19) and (20), but not in (21) and (22).

The process of Regrouping can therefore be stated informally as the following:

(27) Chomsky-adjoin the remaining highest constituent (or constituents) of each reduced conjunct onto the corresponding constituent (or constituents) of the unreduced conjunct. This process is optional, if the reduced conjuncts are still branching; it is obligatory, if the reduced conjuncts are no longer branching. Furthermore, the morpheme "respectively" is introduced, if this process applies to branching reduced conjuncts.[4]

Note that it is not necessary that (27) has to be stated as a rule. It can be regarded as a convention like that of Tree-Pruning.

4. Respectively Insertion. To derive <u>respectively</u> sentences, we cannot insert the "respectively" morpheme to structures like (25) and (26) after Regrouping has applied. It is obvious that right after Regrouping has applied, (28) and (29) have identical structures, and there is no way to apply Respectively Insertion to one structure to get (28), and to the other to get (29).

(28) John and Bill hit the dog and the cat respectively.
(29) John and Bill hit the dog and the cat.

Thus, we must introduce the morpheme "respectively" simultaneously when we apply Regrouping to branching reduced conjuncts, that is, when we Chomsky-adjoin more than one node of each of the reduced conjuncts to those corresponding ones of the unreduced conjunct. Now, in the derivation of (29), as is indicated in (30), all the three application of Identity Deletion result in non-branching reduced conjuncts and in each application of Regrouping, Chomsky-adjunction occurs with respect to only one node in each conjunct. Thus, (29) can never get the "respectively" morpheme.

(30)a John ~~hit the dog~~ and Bill ~~hit the dog~~, and John hit the cat and Bill hit the cat.
b John and Bill hit the dog, and ~~John and Bill~~ hit the cat.

c John and Bill hit the dog and ~~hit~~ the cat.

Yet, in the case of (28), since the input for Regrouping is (31), in which the reduced conjunct is still branching, the morpheme "respectively" is introduced.[5]

(31) John hit the dog and Bill ~~hit~~ the cat.

5. Each-Other Pronominalization. If we apply Identity Deletion to (7a), we get

(32) John hit Bill and Bill John.

If we choose to apply Regrouping to (32), we get (33)

(33)? John and Bill hit Bill and John respectively.

Now, we can apply the Each-Other Pronominalization rule to (33) to yield (7b)

(34) Each-Other Pronominalization (obligatory)
X_1-and-$[NP_1$-$NP_2]_{NP}$ -Y- and-$[NP_2$-$NP_1]_{NP}$-Z-respectively

1 2 3 4 5 6 7 8

⟶ 1-2-3-4-5-each other-7-Ø

(7b) John and Bill hit each other.

It should be noticed that our formulation of Each-Other Pronominalization is able to prevent (35) with the reading of (36) from being converted into (7b).

(35)*John and Bill hit Bill and John.
(36) John hit Bill and himself and Bill hit John and himself.

6. Conclusion: It has been shown in Tai (1969) that among those alternative analyses of coordination reduction mentioned in section 1, Postal's (1968) is the most general and revealing one. Roughly speaking, Postal's approach is first to optionally convert higher-order coordinate structures into lower-order ones by a process which has a function similar to our Regrouping, and then to delete obligatorily all instances but one of the identical constituents. For example, to get (2b), Postal first convert (2a) into "John and Bill came and came," and then to delete one of the two instances of "came" to yield (2b). It has also been shown in Tai (1969) that given Respectively Insertion and Each-Other Pronominalization, Postal's approach can be extended to account for the A, C, and D types of coordination reduction, but not the B type. It should be

noticed that Postal's approach is inherently incapable of handling type B reduction without treating Gapping and the deletion of identical objects as two independent rules. Our analysis is no more complex than Postal's, yet, it can account for all four types of coordination reduction. It is therefore more general and revealing than Postal's, and consequently, than those still less general mentioned in section 1.

Further evidence of the greater explanatory value of the proposed treatment relative to Postal's comes from the investigation of the similarities and differences between languages in their patterns of reduced coordination. Thus, as shown in Tai (1969), in languages like Chinese, there is only type A reduction,[6] reductions of type B, C, and D being ungrammatical. Postal's approach obviously is incapable of accounting for languages with type A reduction but without type C reduction, since in his approach type A reduction always implies type C reduction. His approach also fails to account for the fact that while in English B, C, and D types all exist, in Chinese none of them do. In our analysis, since C and D types of reduction are both derived from the B type, if we can explain the absence of the B type reduction, we can automatically explain the absence of C and D types as well. In fact, it has been shown in Sanders and Tai (1969) that the absence of the B type reduction in Chinese can be explained by an independently motivated general condition on identity deletion for Chinese-type languages, namely, the Immediate Dominance Condition.

The greater generality of the proposed analysis relative to Postal's is essentially due to the ordering of Identity Deletion before Regrouping. It is this ordering that enables us to handle type B reductions by means of the same general reduction process which accounts for all the other types. It is also by virtue of this ordering that the proposed analysis is provided with the capacity of explaining the absence of the B, C, and D types of reduction in Chinese by means of a single independently motivated condition on identity deletion in general in this language. Therefore, the ordering of Identity Deletion before Regrouping in the present analysis is justified by the fact that the otherwise ordering, as in Postal's analysis, cannot capture the generality captured by the proposed analysis.

FOOTNOTES

This paper is a revision of the second chapter of my Ph.D. dissertation, received at Indiana University, December, 1969. I would like to express my gratitude to Gerald Sanders for his criticisms and suggestions

on this paper. I have also benefited from discussions with Emmon Bach, Andreas Koutsoudas, and Stanley Peters on the problem of coordination reduction.

1. To formulate (17) into a mirror image rule as (18), it is necessary for us to assume either that the conjunction and is a feature of the coordinate node at the time that Identity Deletion applies, or that it is inserted after Identity Deletion and Regrouping have both applied. For detailed discussions on the mirror image convention, see Langacker (1969).

I have adopted Koutsoudas' (forthcoming) formulation of this rule with modifications.

2. In Tai (1969), it has been shown that through Conjunction Distribution and First Conjunction Deletion, (23) will be converted into (37), which is the correct derived structure for (1b).

(37)

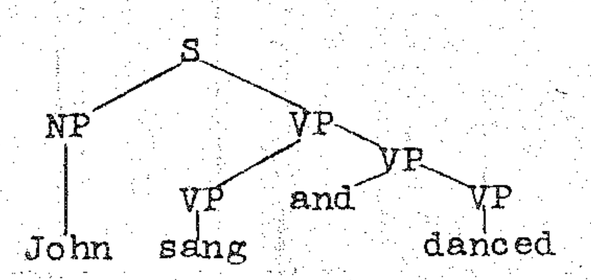

3. Through Conjunction Distribution and First Conjunction Deletion, (22) will be converted into (38).

(38)

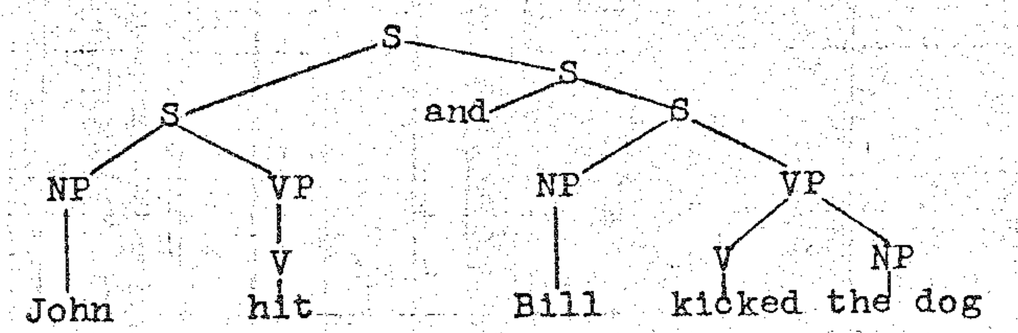

If we assume that the sentence boundary plays a role in the assignment of intonation, (38) would give (39) but not (40), which is more acceptable than (39) for most of our English informants.

(39)? John hit, and Bill kicked the dog.
(40) John hit, and Bill kicked, the dog.

The fact that (40) is more acceptable than (39) does not constitute evidence against the proposed analysis of coordination reduction. Consider the fact that in Japanese, (41) is grammatical, but not (42).

(41) watakushi wa sakana o, Biru wa gohan o tabeta.
(42)*watakushi wa sakana o, Biru wa gohan o, tabeta.

The contrast between English and Japanese with respect to the intonation in reduced coordinate sentences does not argue for any particular alternative analysis of coordination reduction.

4. Since in our formulation, Regrouping can apply only after Identity Deletion has applied, questions should be raised concerning the derivation of respectively constructions from coordinate sentences in which there is no identity at all. For example,

(43)a James kicked the dog and John hit the cat.
b James and John kicked the dog and hit the cat respectively.
c James and John kicked and hit the dog and the cat respectively.

Perhaps, the answer is that Regrouping can be independent of Identity Deletion in English. However, since I don't know whether sentences like (43)b and (43)c are grammatical for all languages which have type C reductions, I will not attempt to answer the question.

5. The other feasible alternative is to apply Respectively Insertion optionally to structures like (21) and (22), that is, reductions of the B type, and then to apply Regrouping obligatorily to structures attached with the morpheme "respectively." Thus, in this alternative analysis, Regrouping is always obligatory, and it applies when the reduced conjuncts are non-branching, or when the coordinate node is attached with the morpheme "respectively." Now, since in the derivation (30), there has never been non-branching reduced conjuncts, the "respectively" morpheme can never be introduced.

6. In Chinese, verb coordinations do not exist. Thus, sentences like (4c) are ungrammatical. See Sanders and Tai (1969) for detailed discussions.

BIBLIOGRAPHY

Dougherty, Ray C. 1970. "A grammar of coordinate conjoined structures: I." Language, Vol. 46, No. 4, pp. 850-98.

Langacker, Ronald W. 1969. "Mirror image rules I: syntax." Language, Vol. 45, No. 3, pp. 575-98.

Koutsoudas, Andreas. Forthcoming. "Gapping, conjunction reduction and identity deletion," to appear in Foundations of Language.

Postal, Paul M. 1968. "Coordination reduction." Section 111, Scientific Report 2, Specification and Utilization of a Transformational Grammar. Yorktown Heights, N. Y.: IBM, Thomas J. Watson Research Center.

Ross, John R. 1967a. "Gapping and the order of constituents." PEGS Paper No. 8. Washington: Center for Applied Linguistics.

_____. 1967b. Constraints on Variables in Syntax. M. I. T. doctoral dissertation.

Sanders, Gerald A. 1969. "Invariant ordering." Duplicated. University of Texas at Austin. (Mimeographed. Indiana University Linguistics Circle, 1970.)

_____. 1970. "Constraints on constituent ordering," Papers in Linguistics, Vol. 2, No. 3, pp. 460-502.

Sanders, G. A., and J. H-Y. Tai. 1969. "Immediate dominance and identity deletion in Mandarin Chinese." Paper presented at the Winter Meeting of the Linguistic Society of America, December 29, 1969.

Schane, S. A. 1966. "A Schema for Sentence Coordination." Information System Language Studies No. 10. Bedford, Mass.: Mitre Corp.

Stockwell, Robert P., Paul Schacter, and Barbara Hall Partee. 1969. Integration of Transformational Theories on English Syntax. Two Volumes. Air Force Document ESD-TR-68-419. Los Angeles: U. C. L. A.

Tai, James H-Y. 1969. Coordination Reduction. Indiana University doctoral dissertation. (Mimeographed. Indiana University Linguistics Circle, 1971.)

SOME FORMAL PROPERTIES OF NON-SEMANTIC ITEMS

E.Vasiliu

University of Chicago

§ 1. The syntactic status of lexical items is specified within the framework of TG in two main ways: either (a) by the fact they are "marked" in the dictionary by a category symbol (expressing the syntactic category which a lexical item belongs to; this marking enables one to insert lexical items under the proper dominance; or (b) by the fact that a "lexical insertion rule" substitutes an actual lexical item for a (string of) "predicate(s)" dominated by a category symbol. Obviously, (a) characterizes the (1965) version of TG, whereas (b) characterizes the "generative semantics" approach.

The semantic status of the lexical items is specified within the framework of the "interpretive semantics" (that is a semantics of the Katz & Fodor, 1965 type) by means of a set of "semantic markers"; in terms of the "generative semantics", the semantic status of a lexical item is specified in terms of the "predicates" (in McCawley's 1970 a, b sense) for which it is substituted (by a lexical insertion rule) within the "semantic representation" of a specific sentence.

Both ways of specifying the semantic status of lexical items are to be viewed as implicitly based on the following assumptions:

(i) that lexical items are L-equivalent to either the set of "semantic markers" (in terms of the "interpretive semantics") or the (string of) predicate(s) which the lexical items are substituted for by lexical insertion rules;

(ii) that, as a consequence of (i), a string of lexical items (which belong to a phrase or to a sentence) may be asserted exactly under the same conditions under which their corresponding sequence of "semantic marker sets" or their corresponding string of "predicates" may be asserted.

As a matter of fact, neither "interpretive" nor "generative" semantics do specify the "assertion conditions" for the "sequences of semantic markers" or for the string of "predicates". However, for sake of our discussion, we can assume these conditions are